FNAME: \\S2\DATA\CATALOG PAGES\STANDARD SALES DRAWINGS\AIR VALVES\DEEP WELL AIR VALVES WITH THROTTLING DEVICE\DL42

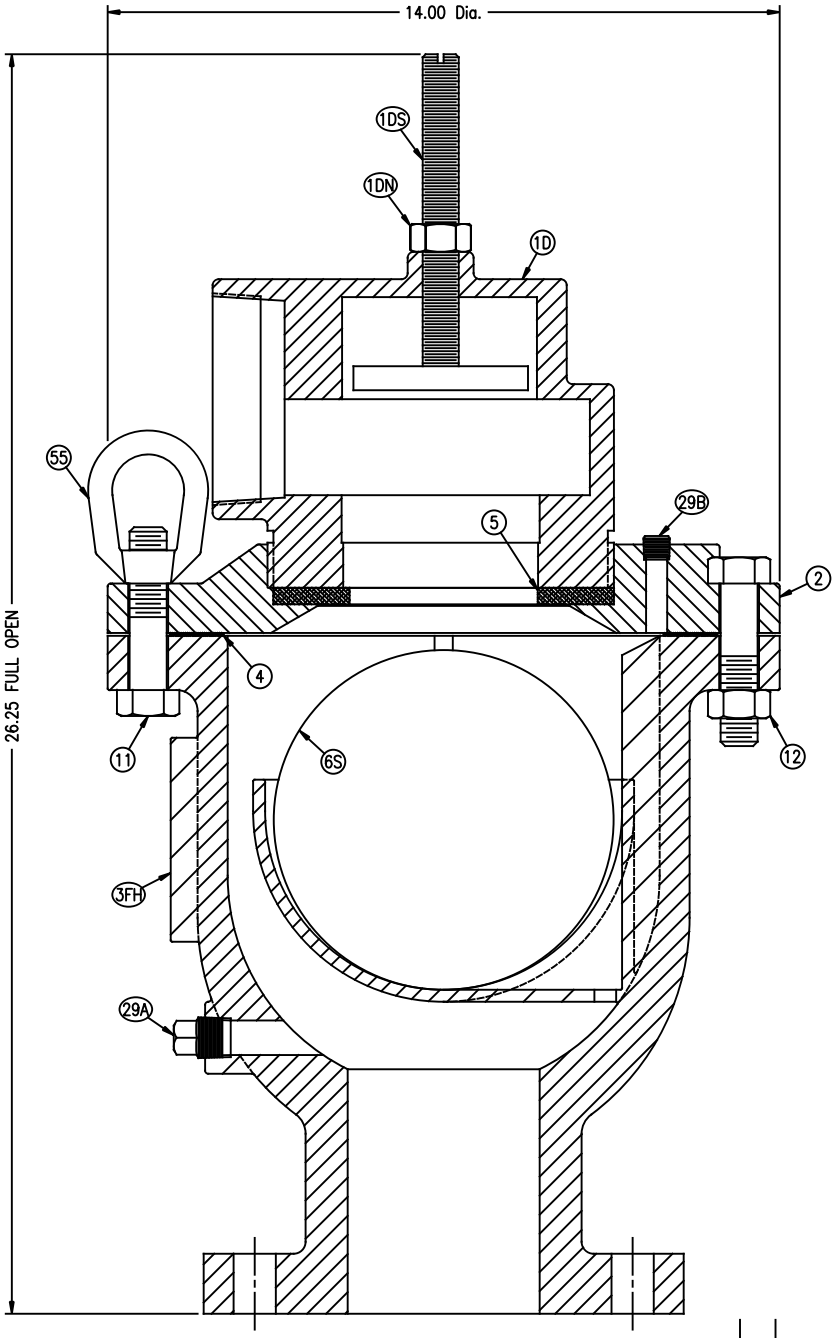

PARTS LIST				
PART NO.	DWG. NO.	DESCRIPTION	MATERIAL	QTY.
1D	12–1D	DEEP WELL TOP	CAST IRON	1
1DS	12–1DS	DEEP WELL STEM	STEEL	1
1DN	60–12	NUT	STEEL	1
2	5–2C	FLANGE	CAST IRON	1
3FH	5–3CFH	BODY	CAST IRON	1
4	5–4	GASKET	ARMSTRONG	1
5	5–5	SEAT	BUNA–N–RUBBER	1
6	5–6S	FLOAT	STAINLESS STEEL	1
11	30–33	BOLT	STEEL	8
12	4–12	NUT	STEEL	6
29A	PLG–.5	PLUG	BRASS	1
29B	.25SOCHDNPTPL	PLUG	BRASS	1
55	EN 5/8"–11	EYENUT	STEEL	2

INLET FLANGE DATA	
FLANGE DIAMETER	10.00 in.
FLANGE THICKNESS	1.25 in.
BOLT CIRCLE DIAMETER	7.88 in.
NUMBER OF BOLT HOLES	8
BOLT HOLE DIAMETER	0.88 in.

NOTES:
1. INLET SIZE: 4" CLASS 250 FLANGED
   OUTLET SIZE: 4" NPT.
2. APPROXIMATE WEIGHT – 225 lbs.
3. WHEN OPERATING PRESSURE IS BELOW 20 psig, REPLACE ITEM NO. 5 WITH SOFT SEATING MATERIAL DWG. NO. 5–5–L.
4. WHEN OPERATING PRESSURE IS ABOVE 150 psig, REPLACE ITEM NO. 5 WITH HARD SEATING MATERIAL DWG. NO. 5–5–H.

REV	DESCRIPTION	DATE	APPROVED

REVISIONS

DO NOT SCALE DRAWING
DIMENSIONS ARE IN INCHES
UNLESS OTHERWISE SPECIFIED
LINEAR TOLERANCE: ± 0.015

REDRAWN: DATE:
CHECKED: BJL 7-9-13
DRAWN: DJF 7-9-13

Crispin Air Valves

4" CLASS 250 DEEP WELL AIR AND VACUUM VALVE

SIZE C | DWG NO. DL42 | REV 0

SCALE 0.50 = 1.00 | SHEET 1 OF 1