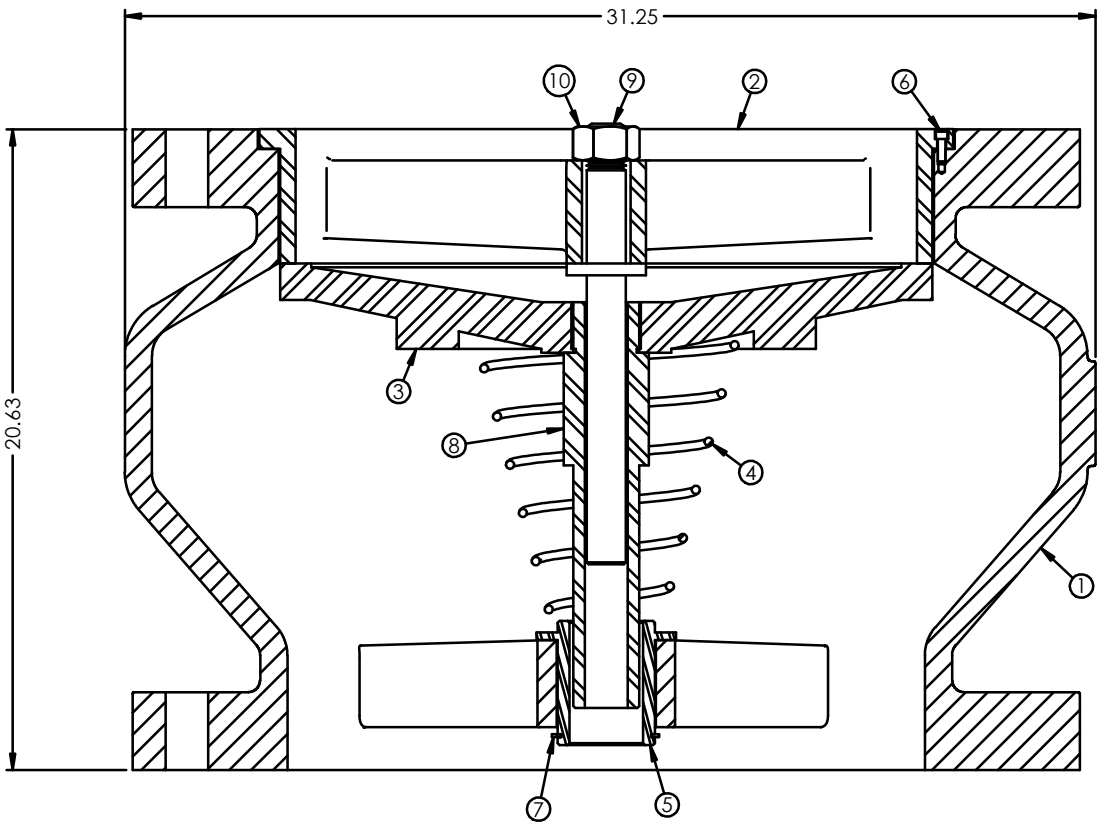

PARTS LIST				
ITEM NO.	PART NUMBER	DESCRIPTION	MATERIAL	QTY.
1	2020-1FH	BODY	DUCTILE IRON	1
2	2020-2	SEAT RING	AL-BRONZE	1
3	2020-3	DISC	AL-BRONZE	1
4	2020-4	SPRING	STAINLESS STEEL	1
5	2020-5	BUSHING	AL-BRONZE	1
6	SHCS.25X.75	SCREW	STAINLESS STEEL	8
7	2020-8	RETAINING RING	STAINLESS STEEL	1
8	2020-30A	DISC SHAFT	AL-BRONZE	1
9	2020-30B	SEAT SHAFT	STAINLESS STEEL	1
10	FHN1.25-7	SHAFT NUT	STAINLESS STEEL	1

FLANGE DATA	
FLANGE DIAMETER	30.50 in.
FLANGE THICKNESS	2.50 in.
BOLT CIRCLE DIAMETER	27.00 in.
NUMBER OF BOLT HOLES	24
BOLT HOLE DIAMETER	1.38 in.

NOTES:
1. INLET SIZE: 20" CL. 300 FLANGED
   OUTLET SIZE: 20" CL. 300 FLANGED
2. APPROXIMATE WEIGHT: 1061 lbs
3. VALVE WILL BE COATED EXTERNALLY WITH PHENOLIC ALKYD PRIMER

REV.	DESCRIPTION	DATE	APPROVED
1	REDRAWN IN SOLIDWORKS	10-12-21	BJL

REVISIONS

UNLESS OTHERWISE SPECIFIED:	
DIMENSIONS ARE IN INCHES	
X.X DIMENSIONS	±.1
X.XX DIMENSIONS	±.01
X.XXX DIMENSIONS	±.005
DRILLED HOLES	±.01
ANGLES	±1°
CONCENTRIC DIAMETERS	SEE BELOW
MACHINED	.005 TIR
MACHINED TO CAST	.02 TIR
MACHINED SURFACES	125 RMS
REMOVE BURRS	
BREAK SHARP EDGES	

MATERIAL:

FINISH:

	NAME	DATE
DRAWN	DJF	10-12-21
CHECKED	-	-
ENG APPR.	-	-
MFG APPR.	-	-
Q.A.	-	-

FILE LOCATION: \\S2\s1\Drawings\ASSEMBLY\GC\

FILE NAME: GC203 8280801 r1

PROPRIETARY AND CONFIDENTIAL
THE INFORMATION CONTAINED IN THIS DRAWING IS THE SOLE PROPERTY OF CRISPIN VALVE. ANY REPRODUCTION IN PART OR AS A WHOLE WITHOUT THE WRITTEN PERMISSION OF CRISPIN VALVE IS PROHIBITED.

DO NOT SCALE DRAWING

CRISPIN VALVES

TITLE:

20" CL. 300 GLOBE CHECK VALVE

SIZE	DWG. NO.	REV
B	GC203 8280801	1

SCALE: 0.25:1 | WT: LB | SHEET 1 OF 1